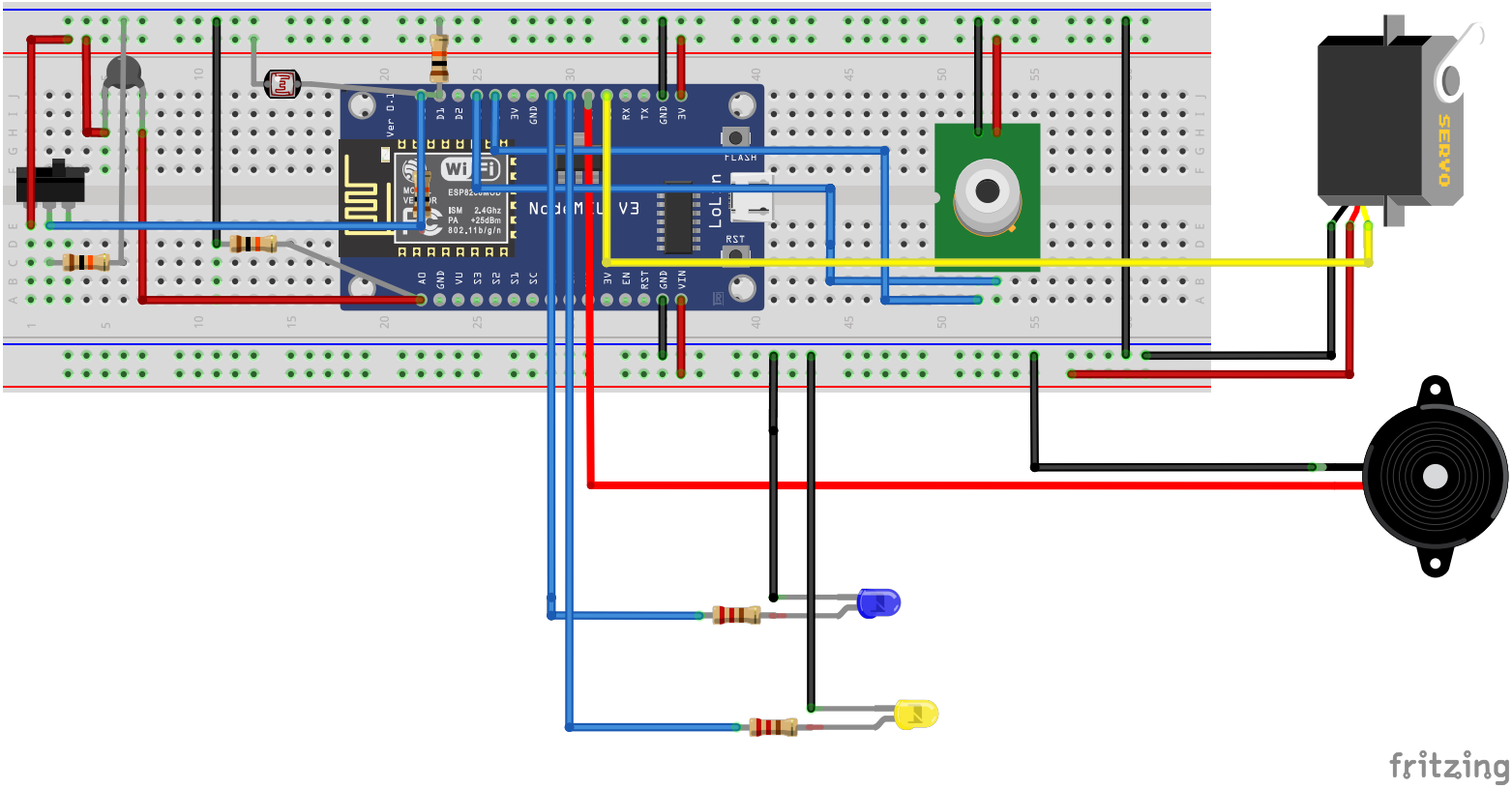
SERVO
FLASH
RST
fritzing